WC2XSR / 13 / W5JGV
Precision Oscillator / Buffer / Oven Controller
for 166.5 KC CW Transmitter
by Spectrotek Services
17 Aug 02 file: osc-3

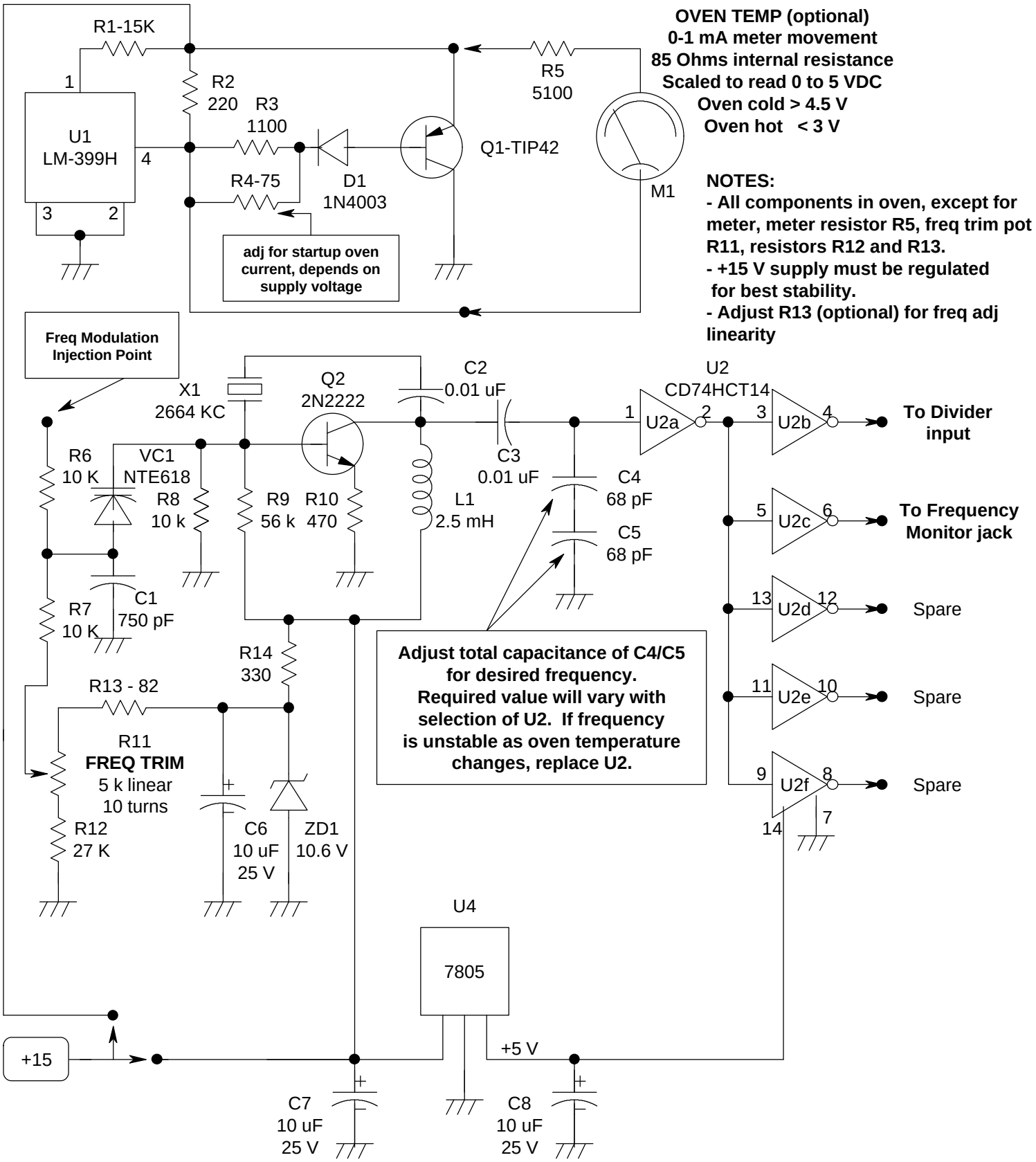

OVEN TEMP (optional)
0-1 mA meter movement
85 Ohms internal resistance
Scaled to read 0 to 5 VDC
Oven cold > 4.5 V
Oven hot < 3 V

NOTES:
- **All components in oven, except for meter, meter resistor R5, freq trim pot R11, resistors R12 and R13.**
- **+15 V supply must be regulated for best stability.**
- **Adjust R13 (optional) for freq adj linearity**