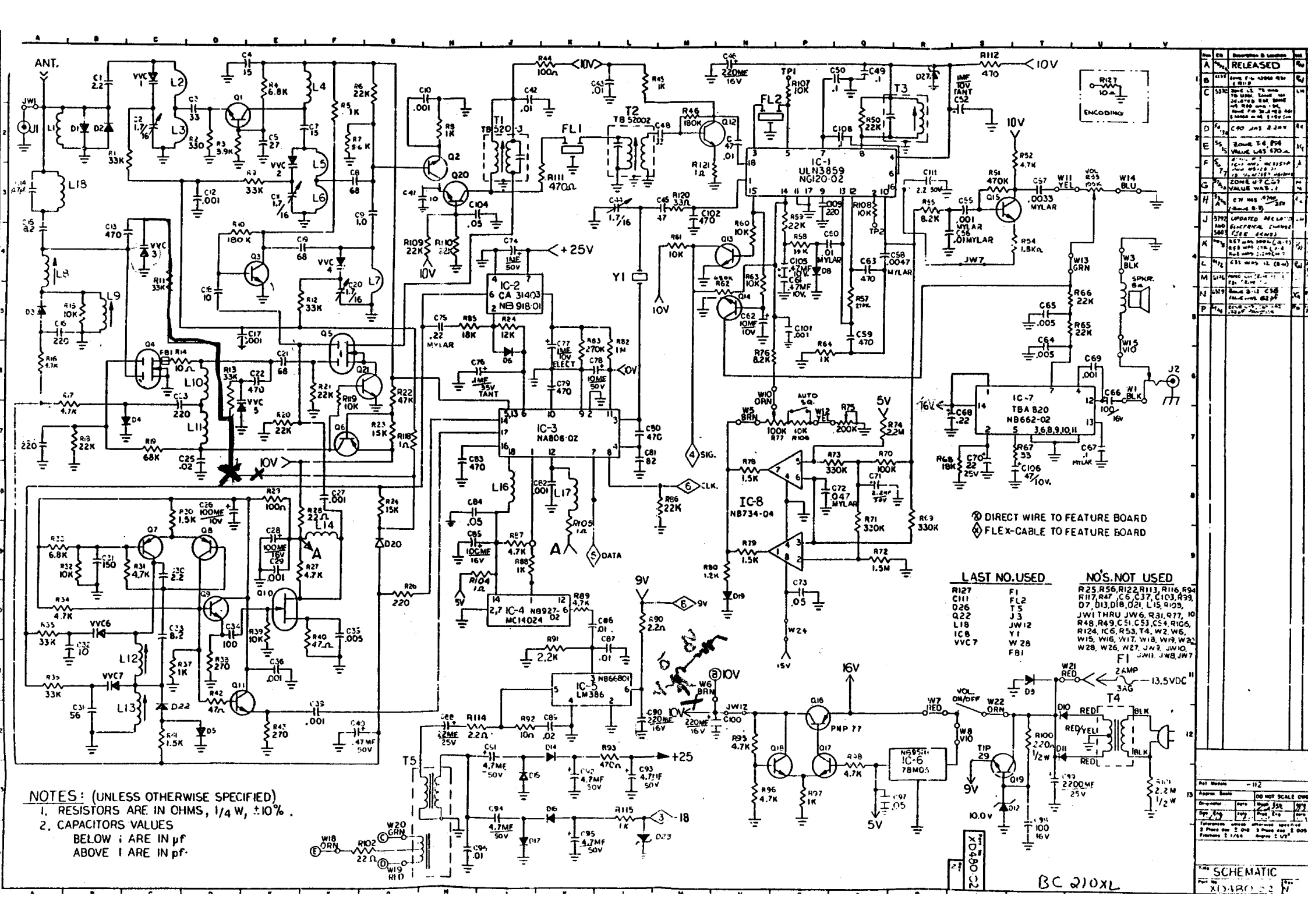
ANT.
IC-1 ULN3859 NG120-02
IC-2 CA 31403 NB 918-01
IC-3 NA806-02
IC-4 NB927-02 MC14024
IC-5 LM386 NB66801
IC-6 78M05
IC-7 TBA 820 NB662-02
IC-8 NB734-04
T1 TB520-3
T2 TB 52002
T3
T4
T5
FL1
FL2
Y1
+25V
10V
9V
16V
5V
13.5VDC
ENCODING
DIRECT WIRE TO FEATURE BOARD
FLEX-CABLE TO FEATURE BOARD
LAST NO. USED
R127 F1
C111 FL2
D26 T5
Q22 J3
L18 JW12
IC8 Y1
VVC7 W28
FB1
NO'S. NOT USED
R25, R56, R122, R113, R116, R94, R117, R47, C6, C37, C103, R39, D7, D13, D18, D21, L15, R105, JW1 THRU JW6, R31, R77, R48, R49, C51, C53, C54, R106, R124, IC6, R53, T4, W2, W6, W15, W16, W17, W18, W19, W20, W28, W26, W27, JW9, JW10, JW11, JW8, JW7
NOTES: (UNLESS OTHERWISE SPECIFIED)
1. RESISTORS ARE IN OHMS, 1/4 W, ±10%.
2. CAPACITORS VALUES
BELOW 1 ARE IN µf
ABOVE 1 ARE IN pf.
RELEASED
SCHEMATIC
XD480-02
BC 210XL