500 KHz RF Amplifier Power Supply

by W5JGV

1 Dec 2008

All parts and wires on the right side of the interconnect cable pins are in the power amplifier chassis.

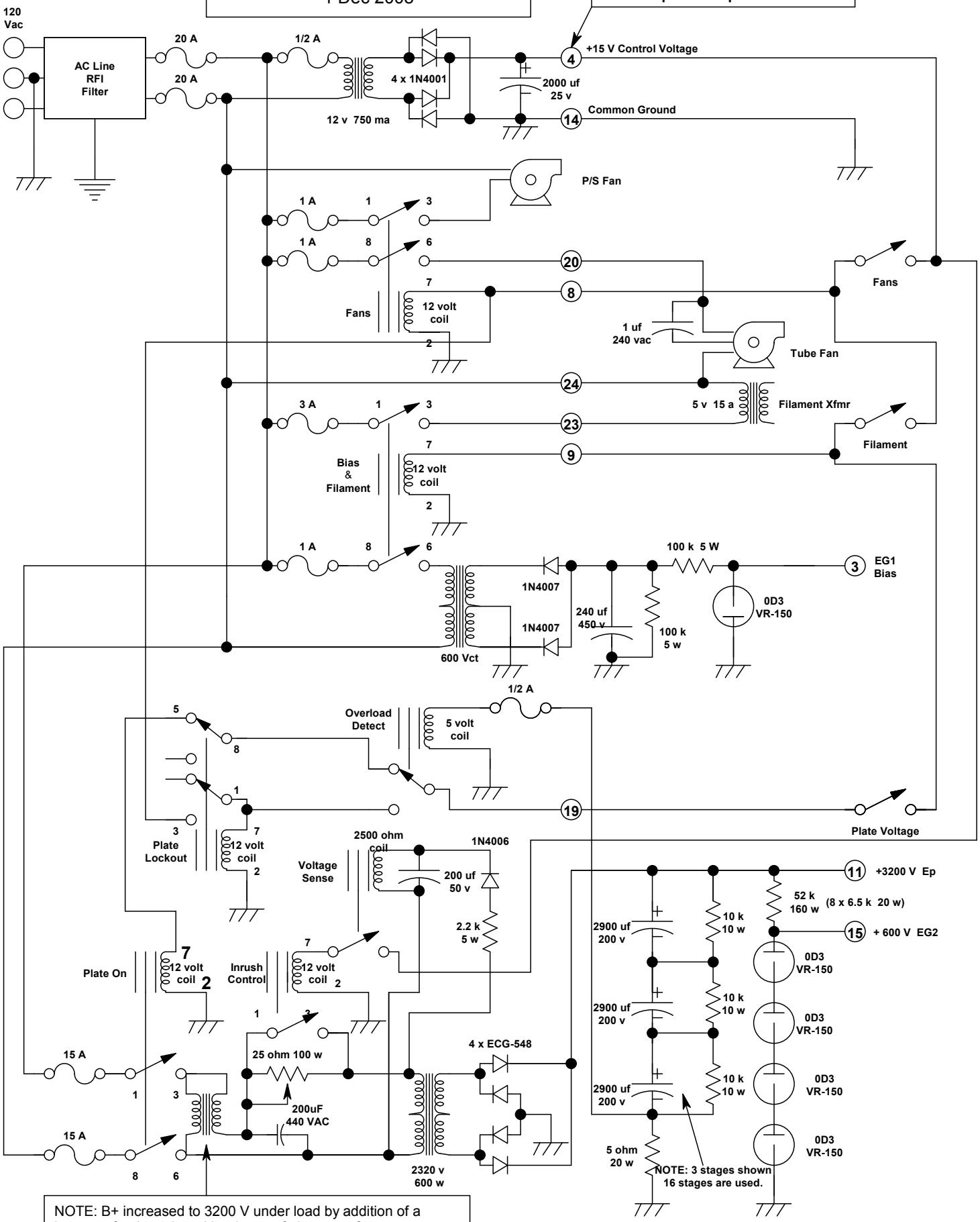

NOTE: B+ increased to 3200 V under load by addition of a booster xfmr in series with primary of plate transformer.
Pri - 120 V, Sec - 20 V 25 A